All information is copyright of allen ©

YS7180C-REF

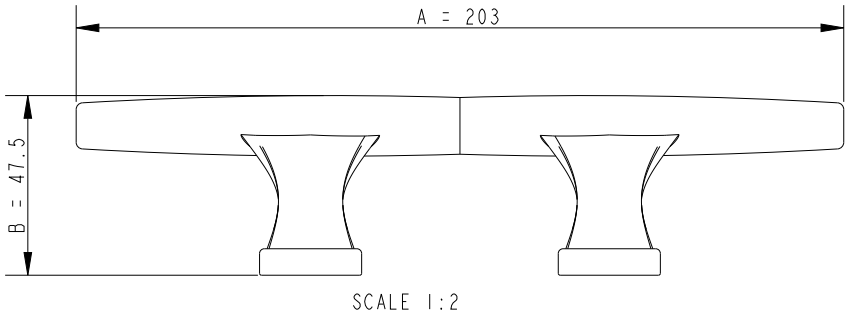

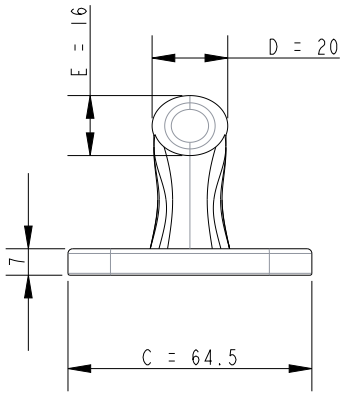

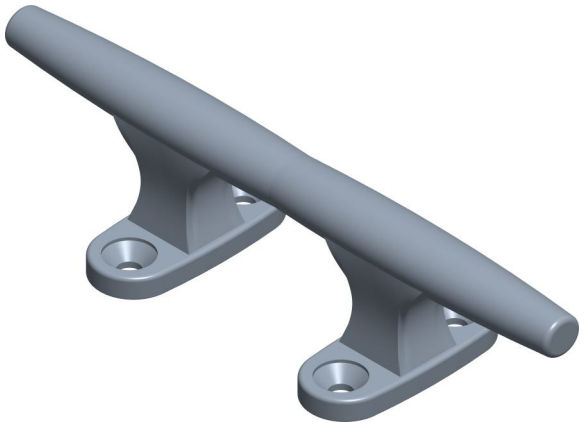

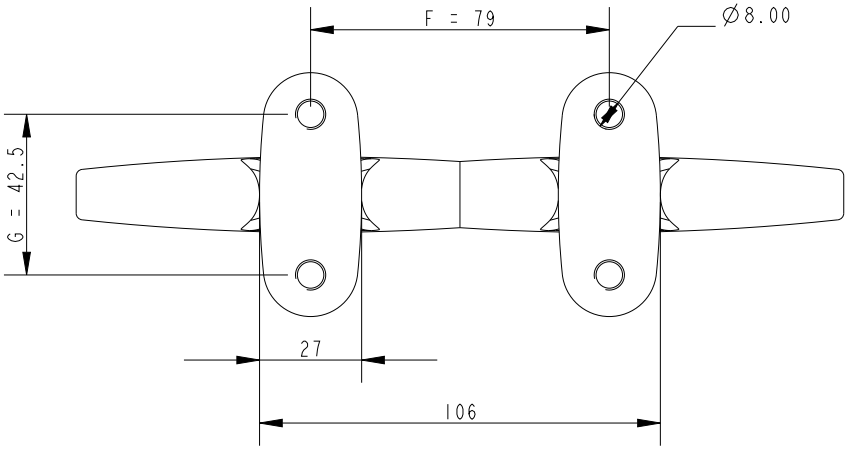

DIMENSIONS FOR REFERENCE ONLY

allenbrothers.co.uk
+44(0)1621 772477

Specification								
A mm	B mm	C mm	D mm	E mm	F mm	G mm	Fixing hole diameter mm	Weight g
203	47.5	64.5	20	16	79	42.5	8	220

Title	Description
YS7180C-REF	Fairlead