All information is copyright of allen ©

# YS7111G-REF

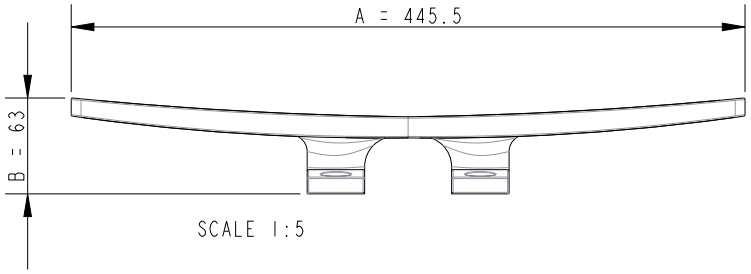


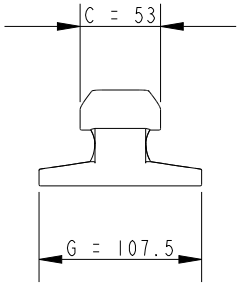


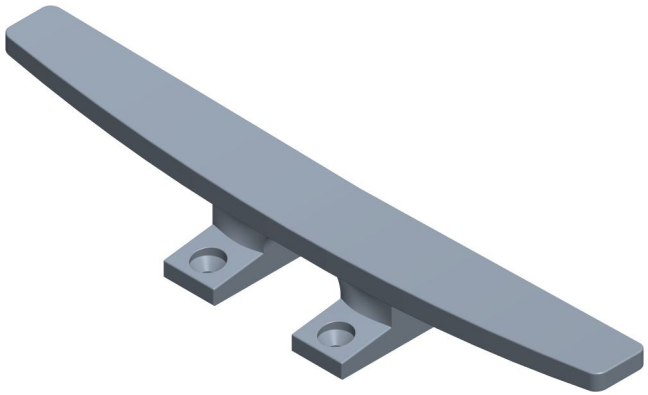


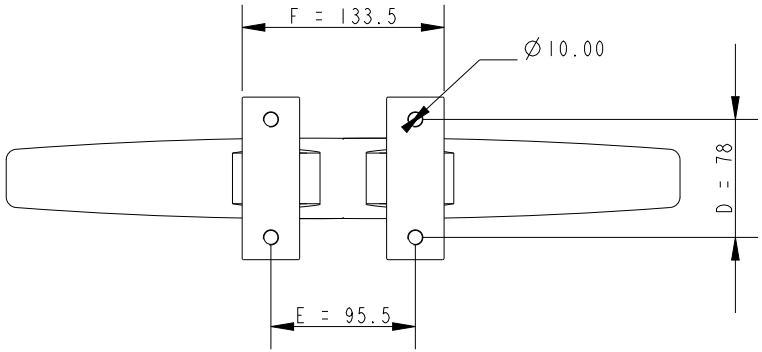


**DIMENSIONS FOR REFERENCE ONLY**

allenbrothers.co.uk
+44(0)1621 772477

| Specification | | | | | | | | |
|---|---|---|---|---|---|---|---|---|
| A mm | B mm | C mm | D mm | E mm | F mm | G mm | Fixing hole diameter mm | Weight g |
| 445.5 | 63 | 53 | 78 | 95.5 | 133.5 | 107.5 | 10 | 1266 |

| Title | Description |
|---|---|
| YS7111G-REF | Fairlead |