All information is copyright of allen ©

YS7111E

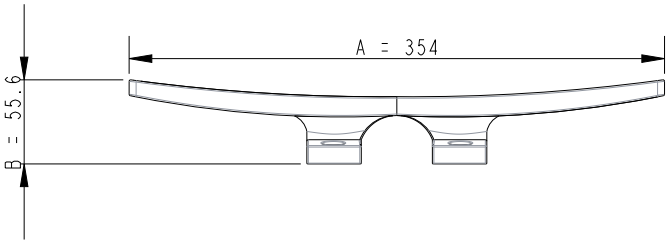

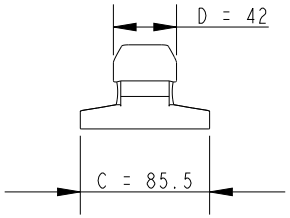

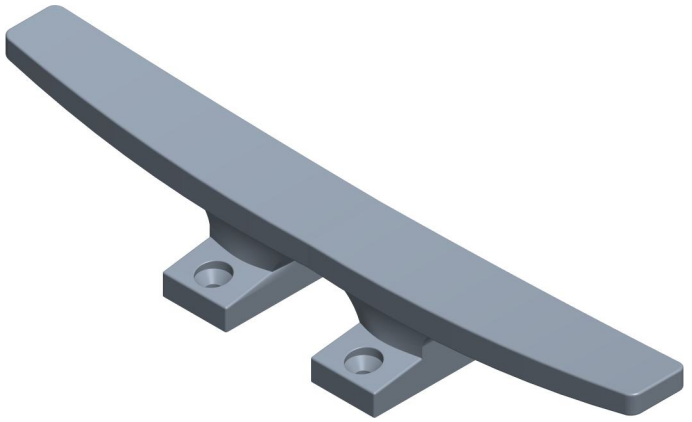

SCALE 1:3

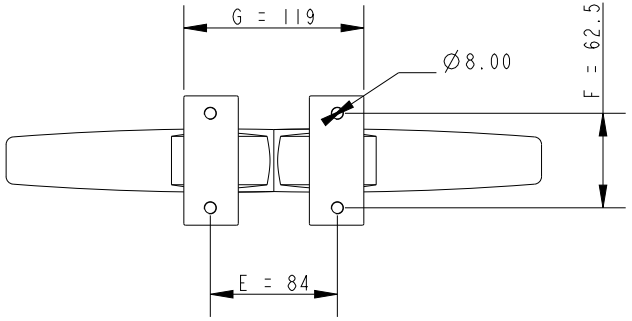

DIMENSIONS FOR REFERENCE ONLY

allenbrothers.co.uk
+44(0)1621 772477

Specification								
A mm	B mm	C mm	D mm	E mm	F mm	G mm	Fixing hole diameter mm	Weight g
354	55.6	85.5	42	84	62.5	119	8	794

Title	Description
YS7111E-REF	Fairlead