All information is copyright of allen ©

YS7110D-REF

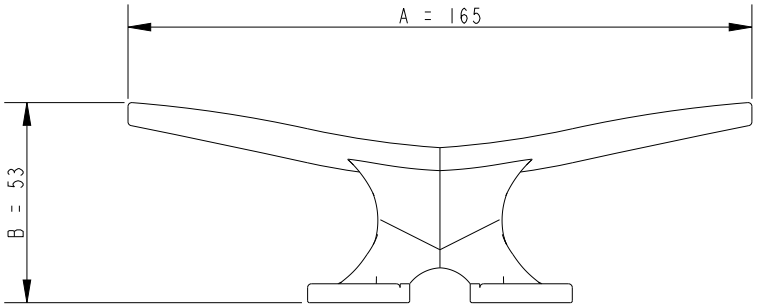

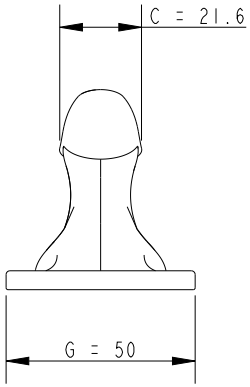



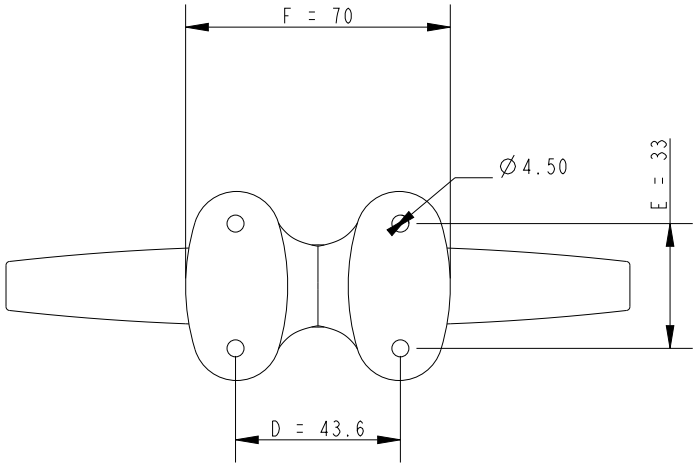

DIMENSIONS FOR REFERENCE ONLY

allenbrothers.co.uk
+44(0)1621 772477

Specification								
A mm	B mm	C mm	D mm	E mm	F mm	G mm	Fixing hole diameter mm	Weight g
165	53	21.6	43.6	33	70	50	4.5	143.8

Title	Description
YS7110D-REF	Fairlead