All information is copyright of allen ©

YS7110B-REF

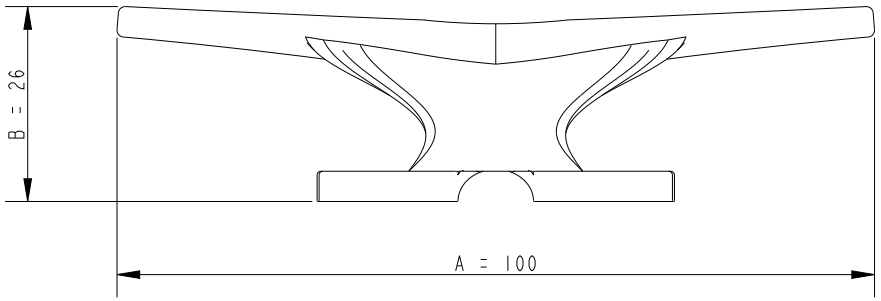

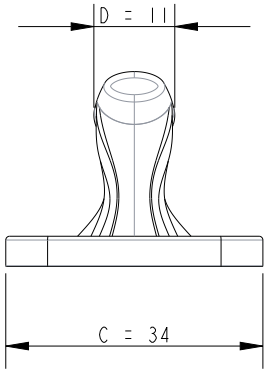

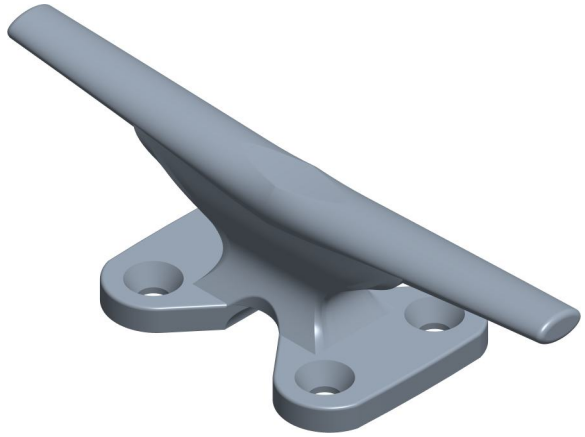

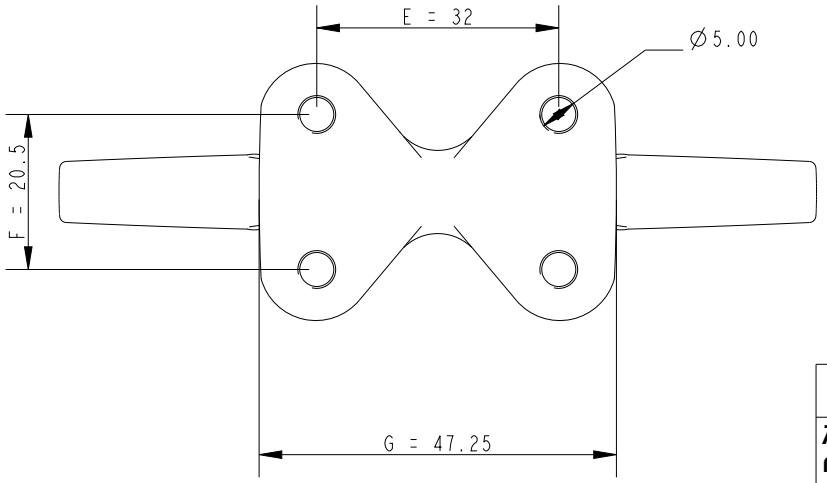

DIMENSIONS FOR REFERENCE ONLY

allenbrothers.co.uk
+44(0)1621 772477

Specification								
A mm	B mm	C mm	D mm	E mm	F mm	G mm	Fixing hole diameter mm	Weight g
100	26	34	11	32	20.5	3.9	5	37

Title	Description
YS7110B-REF	Fairlead