All information is copyright of allen ©

YS7110A-REF

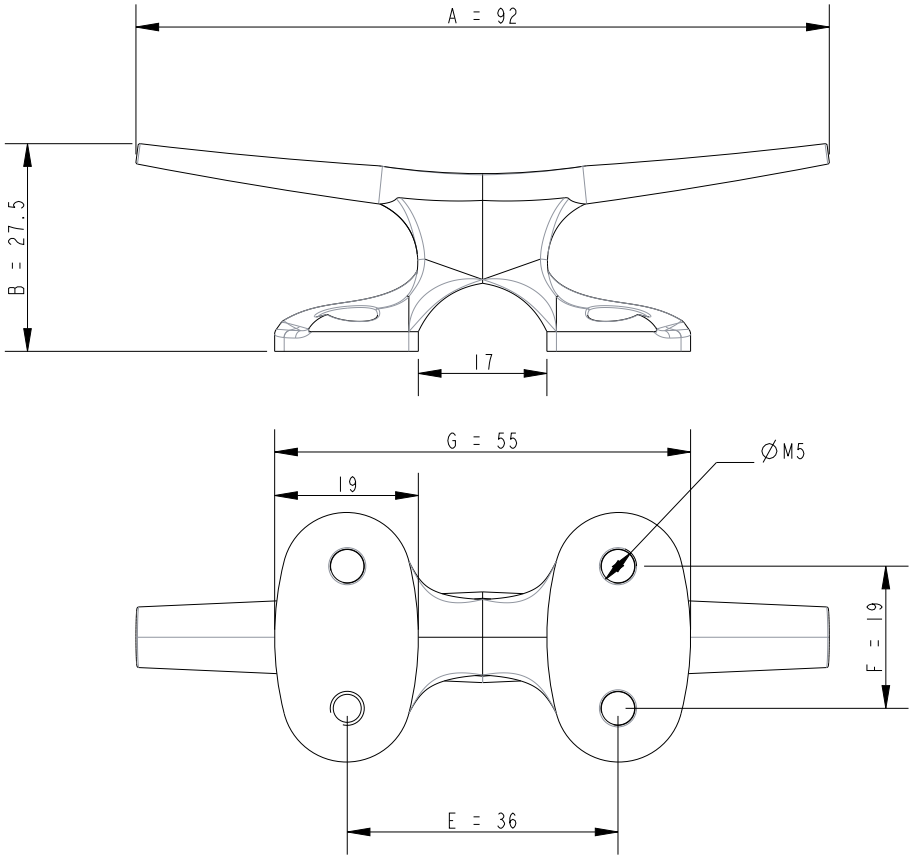

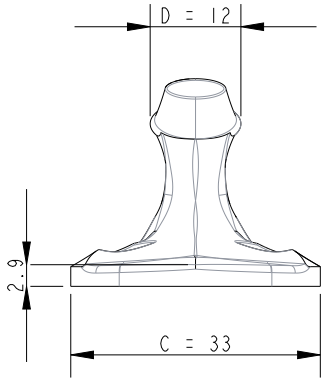



Specification								
A mm	B mm	C mm	D mm	E mm	F mm	G mm	Fixing hole diameter mm	Weight g
92	27.5	33	12	36	19	55	M5	31.3

Title	Description
YS7110A-REF	Fairlead

DIMENSIONS FOR REFERENCE ONLY

allenbrothers.co.uk
+44(0)1621 772477