All information is copyright of allen ©

YS-852A-REF

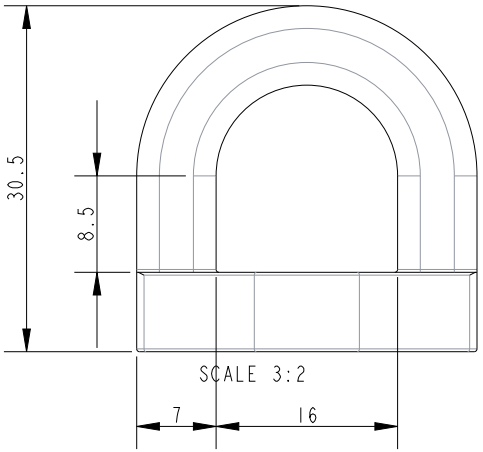

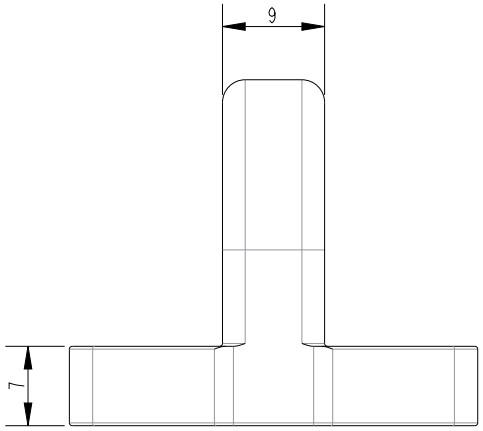



SCALE 3:2

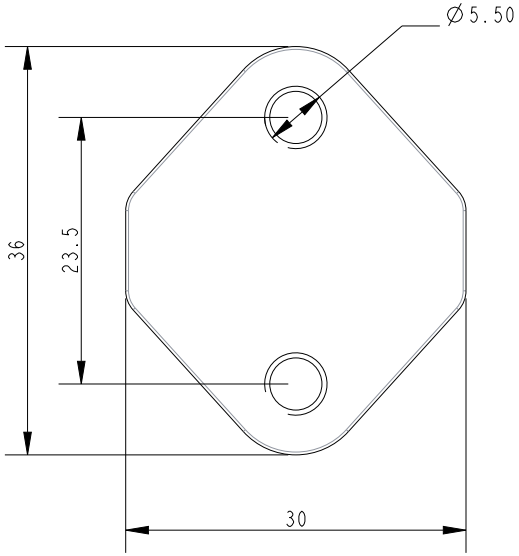

Specification			
Inside Diameter mm	Fixing Hole Size mm	Fixing Hole Centres mm	Weight g
16 x 8.5	5.5	23.5	18

Title	Description
YS-852A-REF	FAIRLEAD

DIMENSIONS FOR REFERENCE ONLY

allenbrothers.co.uk
+44(0)1621 772477