All information is copyright of allen ©

A-FKIT-REF

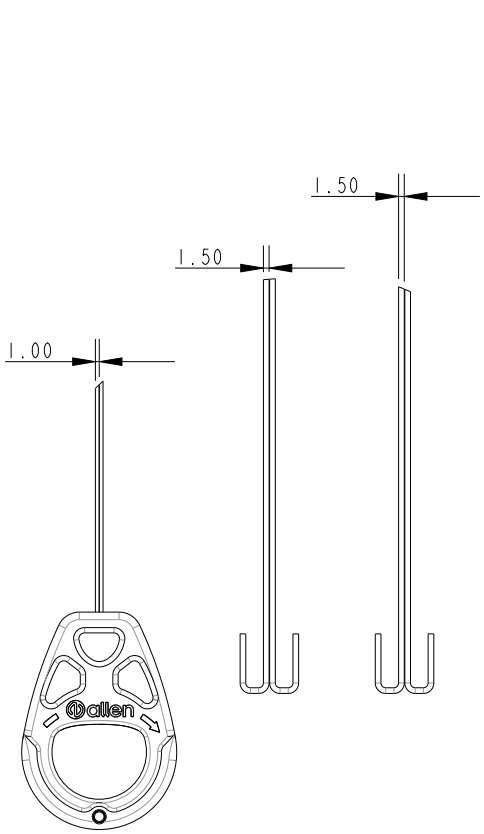

SCALE 1:2

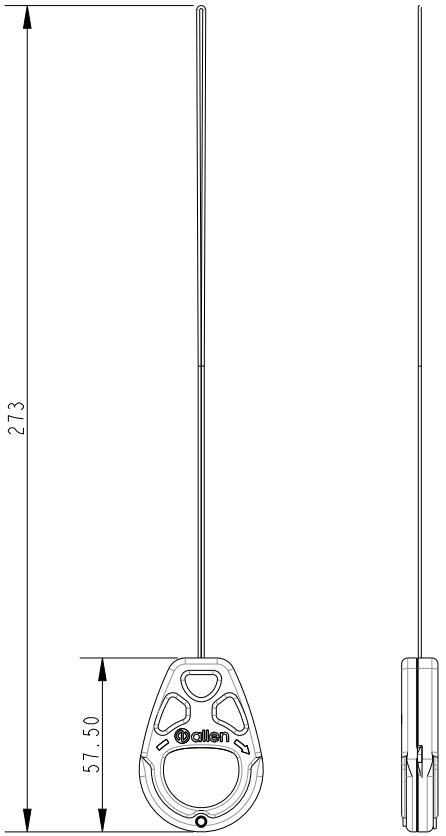

SCALE 2:5

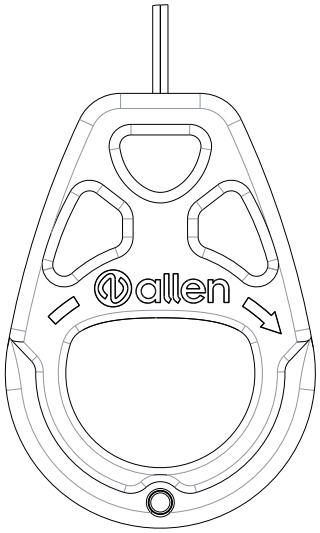

SCALE 1:1

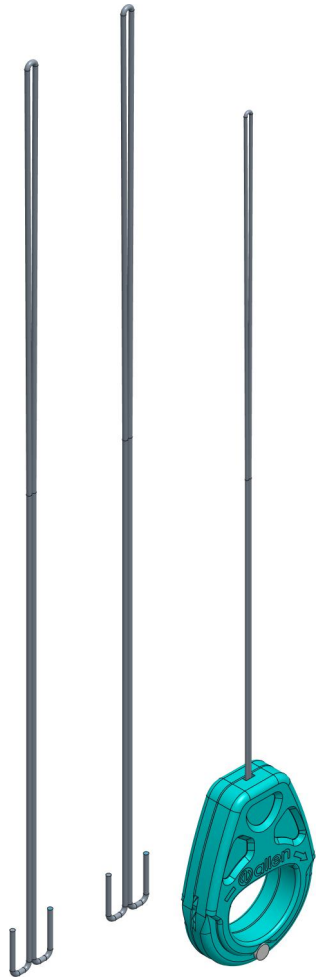

SCALE 1:2

Each kit comes with
2x 1mm wire and
1.5mm wire

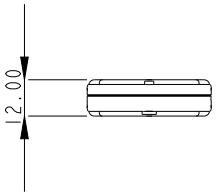

Specification				
Length mm	Weight g	Needle Diameter mm	Rope Diameter mm	Rope Diameter Inch
273	49.6	1 - 1.5	0 - 4	0 - 5/32

DIMENSIONS FOR REFERENCE ONLY

allenbrothers.co.uk
+44(0)1621 772477

Title	Description
A-FKIT-REF	1mm to 1.5mm Splicing needle